5874529
Puppet Theater
Parts and Hardware List

A.	Panel Assembly	1 pc
B.	Feet	2 pcs
C.	Shelf Panel	1 pc
D.	Allen Head Bolts	2 pcs
E.	Flat Washers	2 pcs
F.	Lock Washers	2 pcs
G.	Allen Head Wrench	1 pc
H.	Phillips Head Screws	4 pcs
I.	Phillips Head Screwdriver	1 pc
J.	Finials	4 pcs

* Please make sure that you have all the parts and hardware indicated above before you begin assembly of this item.
* Use the hardware illustrations to determine correct piece and size.
* This item should be assembled on a soft surface to prevent scratching the finish during assembly.
* This item may require periodic tightening.
* This item is to be assembled by an adult and is not intended to be taken apart by a child.

Hardware Illustrations

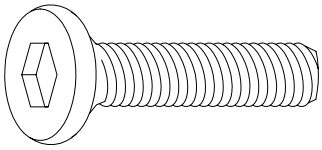

D. Allen Head Bolt

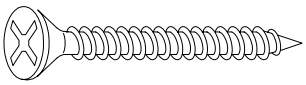

H. Phillips Head Screw

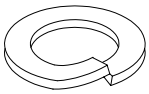

F. Lock Washer

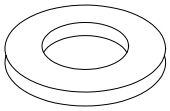

E. Flat Washer

5874529
Puppet Theater

Attach Feet

Parts required

A.	Panel Assembly	1 pc	B.	Feet	2 pcs
D.	Allen Head Bolts	2 pc	E.	Flat Washers	2 pcs
F.	Lock Washers	2 pc	G.	Allen Head Wrench	1 pc

1. **Attach Feet (B)** Place the Panel Assembly (A) down on a soft surface. Align the pre-drilled holes in the Feet (B) with pre-threaded holes in the Panel Assembly (A). Secure with Allen Head Bolts (D), Lock Washers (F), and Flat Washers (E) using the Allen Head Wrench (G). See Illustration #1.

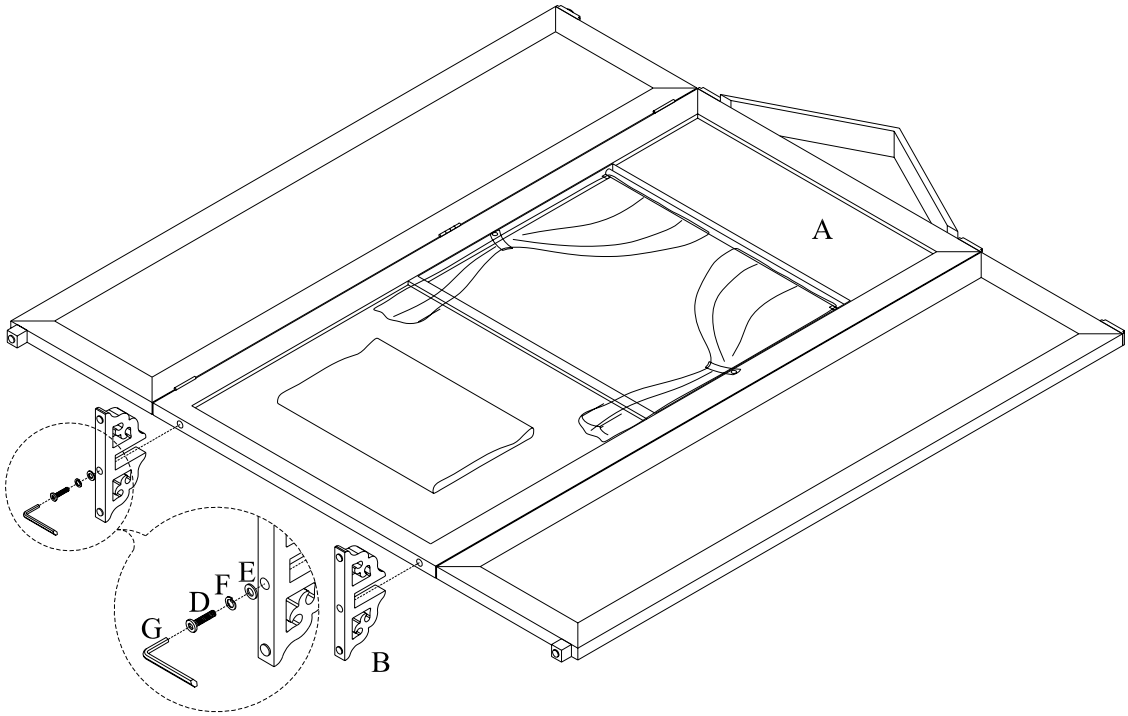

Illustration #1

5874529
Puppet Theater

Attach Shelf Panel & Finials

Parts required

A.	Panel Assembly	1 pc	C.	Shelf Panel	1 pc
H.	Phillips Head Screws	4 pcs	I.	Phillips Head Screwdriver	1 pc
J.	Finials	4 pcs			

2. **Attach Shelf Panel (C)**. Align the pre-drilled holes in the Shelf Panel (C) with holes in Panel Assembly (A) and secure with Phillips Head Screws (H) using the Phillips Head Screwdriver (I). See Illustration #2.
3. **Attach Finials (J)**. Insert the exposed threads of Finials (J) into the pre-threaded holes in the top of the Panel Assembly (A). Secure by turning in a clockwise direction. See Illustration #2.

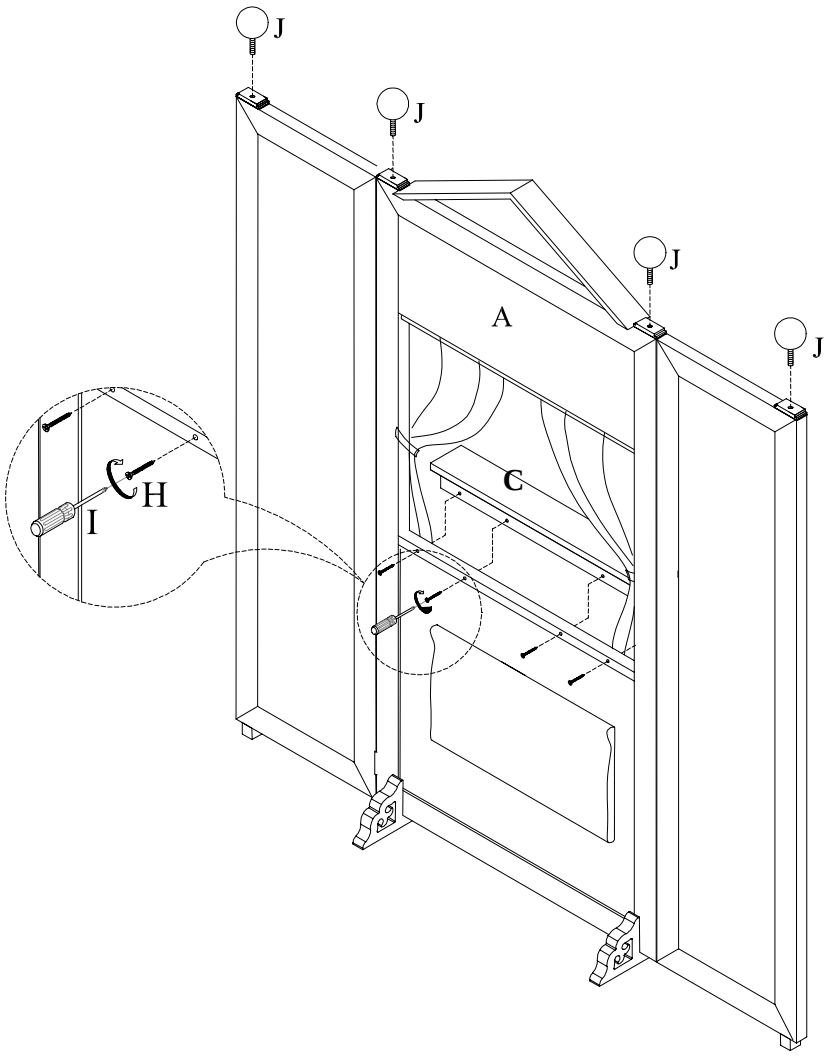

Illustration #2